1A107062 OECA-SMA100

660 nm RCLED

Description

The 1A107062 OECA-SMA100 is a 660 nm Resonant Cavity Surface-Emitting LED in a SMA-receptacle. The assembled TO-46 device is electrical isolated from the SMA-receptacle (maximum voltage 20V) to protect the diode against ESD-damaging.

Applications

- General applications
- POF data communication

Features

- Wavelength λ = 660 nm
- High speed response 70MHz
- Laser Class 3A

Device can differ from picture.
For details and pin out please refer to the drawing

Absolute Maximum Ratings

(T_C = 25°C ± 2°C)

Parameter	Symbol	min.	max.	Unit
Reverse Voltage	V_R		3	V
Forward Current	I_F		50	mA
Pulsed Forward Current [note 1]	I_{FRM}		80	mA
Operating Temperature	$T_{OP} = T_C$	-30	+85	°C
Storage Temperature	Tstg	-40	+85	°C
Soldering Temperature / Soldering Time	T_{sold} / t_{sold}		260/10	°C/s

Note 1: pulse width 1µs, duty ratio =50%

Optical and Electrical Characteristics

(T_C = 25°C ± 2°C)

Parameter	Symbol	Condition	min.	typ.	max.	Unit
Fiber Coupled Power	P_{fiber}	Fiber: 980/1000µm NA = 0.48 I_F = 20mA [note 2]	700	1000		µW
Peak Emission Wavelength	λ_p	I_F = 20mA	640	660	670	nm
Spectral Width (FWHM)	$\Delta\lambda$	I_F = 20mA		10	20	nm
Forward Voltage	V_F	I_F = 20mA		1.9	2.4	V
Reverse Current	I_R	V_R = 3V			10	µA
Cut-of Frequency [note 3]	f_C	I_F = 20mA±1mAp-p	60	70		MHz

Note 2: measured at the exit of 1 meter of fiber.
Note 3: frequency at which the radiant output drops by 3dB relative to the output at 100kHz

OECA
Handwerkerstraße 13
Phone: +49 (0) 3342 36880
eMail: info@oeca.de

OPTO-ELEKTRONISCHE COMPONENTEN UND APPLIKATIONS GMBH
15366 Hoppegarten
Fax: +49 (0) 3342 3688 88
Internet: www.oeca.de

represented by:

DIN EN ISO 9001 : 2008
OECQMISQ20101031231241

HIV
Rosenstraße 1
Phone: +49 (0) 6834 96070
eMail: info@halbleiter-iv.de

HALBLEITER - IMPORT UND VERTRIEBS GMBH
66787 Wadgassen
Fax: +49 (0) 6834 9607 37
Internet: www.halbleiter-iv.de

Drawing

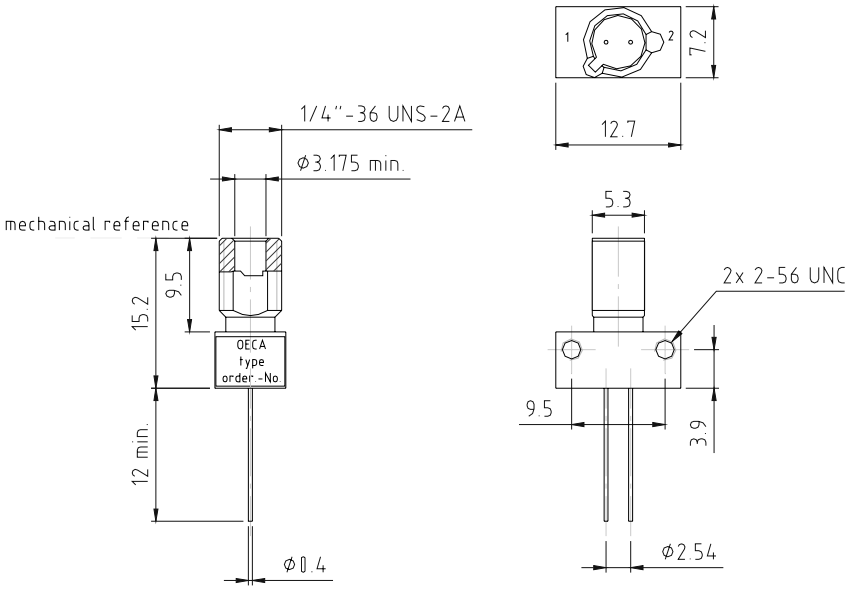

Pinout according to specification

tolerances acc. to DIN ISO 2768mH, unlesss otherwise stated

Accessories: dust cover
nut 1/4"-362UNS
washer 1/4"
2x screw 2-56UNC

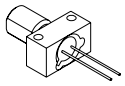

All Dimension in mm.

Pin-Out

Pin	RCLED 1A107062
1	Anode
2	Cathode [note 4]

Note 4 : common to case

Please note: Information given in this product information is believed to be accurate and reliable. However no responsibility is assumed for the consequences of its use nor for any infringement of patents or other rights of third parties. No license is granted by implication or otherwise under any patent or patent rights of OECA or HIV GmbH. These products are sold only according to OECA or HIV GmbH's general conditions of sale, unless otherwise confirmed in writing by OECA or HIV GmbH. Product specifications are subject to change without notice.

For further information on technology, delivery terms and conditions and prices please contact your nearest OECA or HIV GmbH office or one of our representatives.

Copyright 2008, OECA Opto-Elektronische Componenten und Applikations GmbH.
All Rights reserved.

OECA
Handwerkerstraße 13
Phone: +49 (0) 3342 36880
eMail: info@oeca.de

OPTO-ELEKTRONISCHE COMPONENTEN UND APPLIKATIONS GMBH
15366 Hoppegarten
Fax: +49 (0) 3342 3688 88
Internet: www.oeca.de

represented by:

DIN EN ISO 9001 : 2008
OECQMISQ20101031231241

HIV
Rosenstraße 1
Phone: +49 (0) 6834 96070
eMail: info@halbleiter-iv.de

HALBLEITER - IMPORT UND VERTRIEBS GMBH
66787 Wadgassen
Fax: +49 (0) 6834 9607 37
Internet: www.halbleiter-iv.de